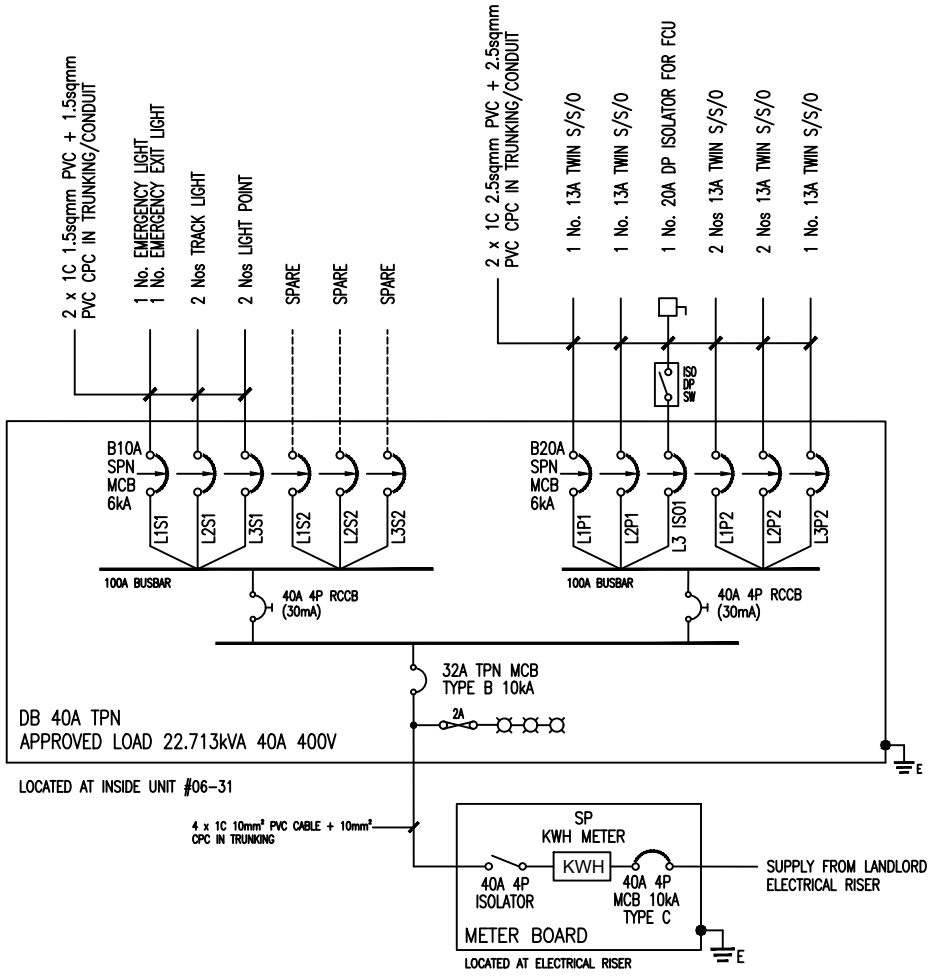

CLIENT / ADDRESS :	MAIN CONTRACTOR :	ELECTRICAL CONTRACTOR :	DRAWING TITLE :	LEW :	CHECKED :	DATE :
SUMMER ACAI (BUKIT TIMAH) PTE LTD Canberra Plaza #B1-07 133 Canberra VW, Singapore 750133	SIXTH ELEMENTS INTERIOR SG PTE LTD 23 KAKI BUKIT RD 4 #02-08 SINGAPORE 417800	TECTRA BUILD PTE LTD 7030 ANG MO KIO AVE 5 #06-15 NORTHSTAR @ AMK SINGAPORE 569880	SINGLE LINE DIAGRAM (SLD)	NAME : EMA Licence No. : Mobile Number. :		11 OCT 2025
					DRAWING NO. : SA-SEI-TTB-SLD	REV : 0